100074 [mm]

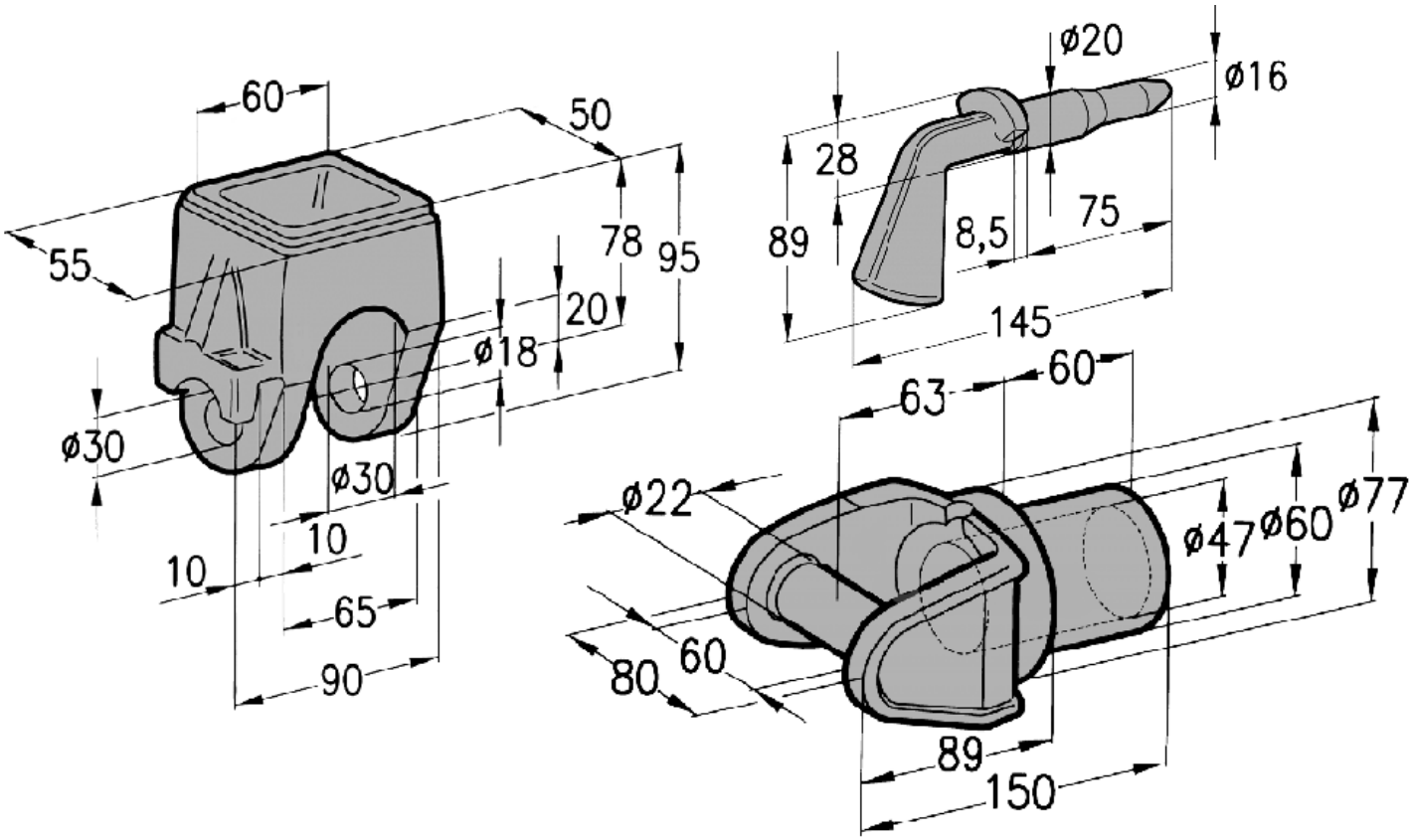

100074 SET VSEBUJE / Set include

Šifra / Code	Kom / Pcs	Opis / Description
10250	4	Nosilec kiper kesona fi18-22 zgornji / Tipping trailer upper ball
10251	2	Klin fi18-22 za nosilec kiper kesona / Pin for tipping trailer ball
10252	4	Nosilec kiper kesona spodnji / Tipping trailer lower ball